# How to balance wheels the easy way...

WITH ALEMITE

# Electronic WHEEL BALANCER

## MODEL 7059 SERIES



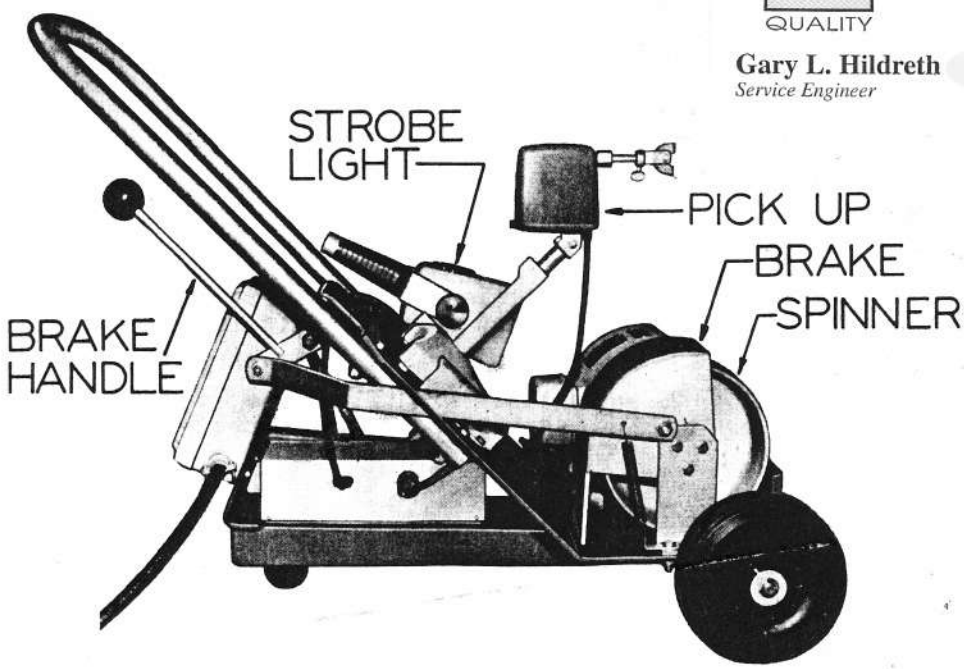


# OPERATIONAL MANUAL

Symbol of SW Excellence
ALEMITE DIVISION
STEWART-WARNER CORPORATION

# INTRODUCTION

This manual provides step by step instructions for using the "Alemite" Electronic Wheel Balancer. The wheel balancer is used in detecting and correcting unbalance conditions in rotating wheels. An unbalance condition is corrected by attaching a weight to the truck wheel rim as a counterbalancing force. Thru the use of the wheel balancer, the location for attaching the weight and the amount of weight to be attached are determined. For explanation of unbalance conditions, see page 12.

With the electronic balancer, the location and amount of unbalance can be determined without anything being attached to the revolving wheel during balancing procedures.

## DESCRIPTION

Your electronic balancer consists of three basic units:

1. A wheel spinner which is used only for spinning the front wheels and tandem rear wheels.

2. A pick-up unit which is placed under the front suspension or axle to convert the mechanical motion of the suspension into electrical signals and transmit these signals to the meter and strobe light.

3. The portable strobe light which contains a meter to indicate an unbalance condition and a light especially designed for observing objects revolving at high speed. A two position switch on the strobe light controls the sensitivity of the meter. Switch position #1 (Regular) is used throughout the balancing procedure. Switch position #2 (Sensitive) is used only for re-check on critical wheels.

   This strobe light will only let you see the position of wheel when heavy part is in down position. When the wheel is stopped and rotated to the position shown when using strobe light, the weight should be attached at the top of the wheel.

The instructions are so presented that one front wheel is completely balanced (both kinetically and dynamically) before proceeding to the other front wheel. The rear wheels are balanced kinetically only.

BE SURE TO READ COMPLETE INSTRUCTIONS BEFORE USING BALANCER

## KINETIC BALANCING (UP & DOWN VIBRATIONS) OF FRONT WHEELS ON TRUCKS

1. Place jack under center of axle and raise both front wheels approximately 3 inches.

2. Remove all weights from inside and outside of rim. Remove all stones from tire tread. Point wheels straight ahead.

3. Wheel should revolve freely. Tap brake backing plate with weight pliers to free wheel if necessary.

4. Position pick-up under front axle. Adjust pick-up arm length until magnet contacts clean, flat surface under axle as close to wheel as possible (see Figure 1).

   See Figure 1 for pick-up positioning and adjustment for either high or low axles.

   NOTE: If pick-up magnet is not positioned properly or is not making good contact, wrong meter reading will result, or meter needle will vibrate excessively.

5. Check for radial runout. Position balancer so that spinner will contact tire tread squarely when balancer is rolled forward toward wheel. Depress brake lever. Roll balancer forward until brake shroud is 1/4" from tire tread. See Figure 2.

   Rotate tire by hand and watch clearance between brake shroud and tire tread.

   If more than 1/4" movement is noted, check for bent rim, bad wheel bearing, tire bead improperly seated, or flat spot on tire. If condition is not corrected before balancing wheel, it may cause unsatisfactory results.

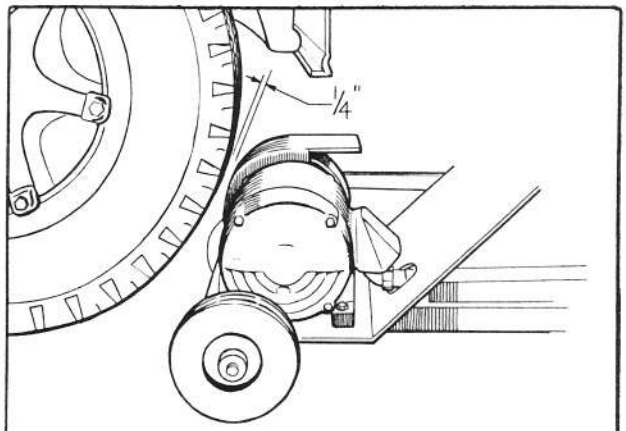


FIG. 2 CHECK RADIAL RUNOUT

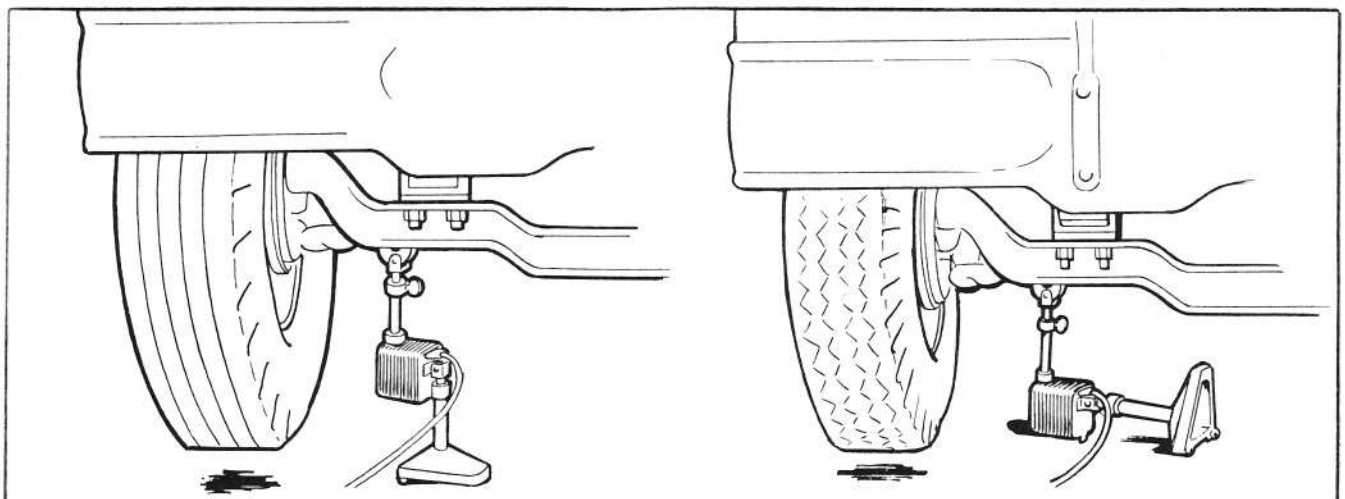

FIG. 1 POSITION PICK-UP FOR HIGH OR LOW AXLE

6. Check for lateral runout. Position strobe light as shown in Figure 3 leaving 1/4" clearance between tire side wall and strobe light handle.

   Rotate tire by hand. If runout exceeds 1/4", check for bent rim or improperly mounted tire.

   In most cases, lateral runout can be corrected by loosening and tightening the rim lug bolts.

   NOTE: If excessive runout is not corrected, vibrations may still exist after wheels have been balanced.

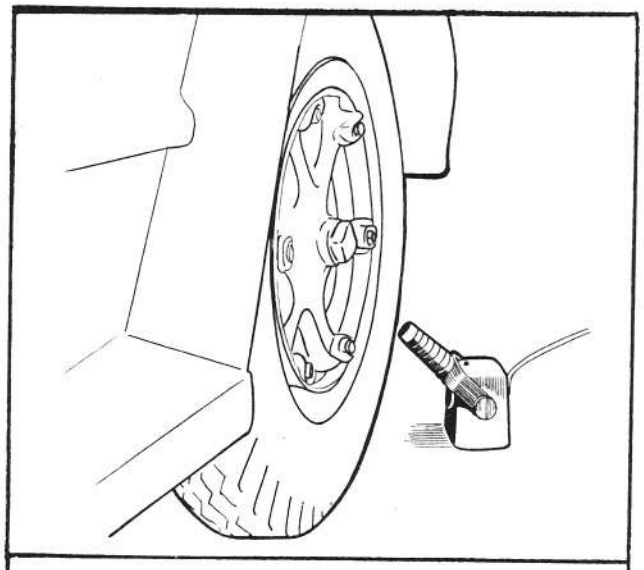

FIG. 3 CHECK LATERAL RUNOUT

7. Insert plug of power cord into proper receptacle. See name plate for voltage rating.

   CAUTION: Before plugging in, read section entitled "Operation" on page 2 of SER 7059. Be sure the spinner is rotating in direction indicated by the arrow on the motor. (If wires of power cable are incorrectly connected to the plug, the motor will rotate in reverse.)

8. Apply a reference mark anywhere on wheel or tire. Use chalk, crayon, or tape.

9. Point strobe light at wheel and tap tire. Light will flash if pick-up magnet is in proper contact.

10. Push balancer toward wheel so spinner contacts tire tread squarely. Push balancer with enough pressure to spin wheel. See Figure 4.

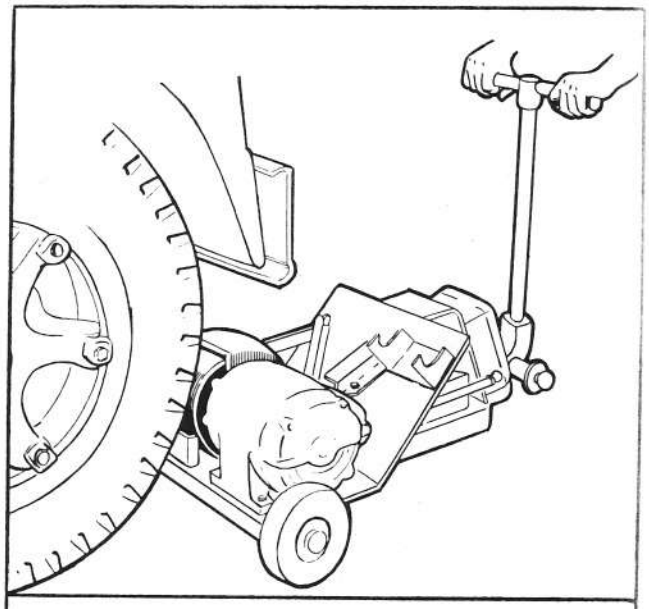

FIG. 4 SPINNING FRONT WHEEL

   Point strobe light at wheel and watch meter while wheel is picking up speed.

   WHEN NEEDLE HESITATES OR DROPS BACK FOR A MOMENT AND THEN CONTINUES TO CLIMB UP THE SCALE, PULL BALANCER AWAY FROM WHEEL AND ALLOW WHEEL TO COAST.

   While wheel is COASTING, needle will rise again. When needle rises to its maximum reading, balancing speed has been reached.

   When balancing speed has been reached, glance at coasting wheel and note position of reference mark. See Figure 5.

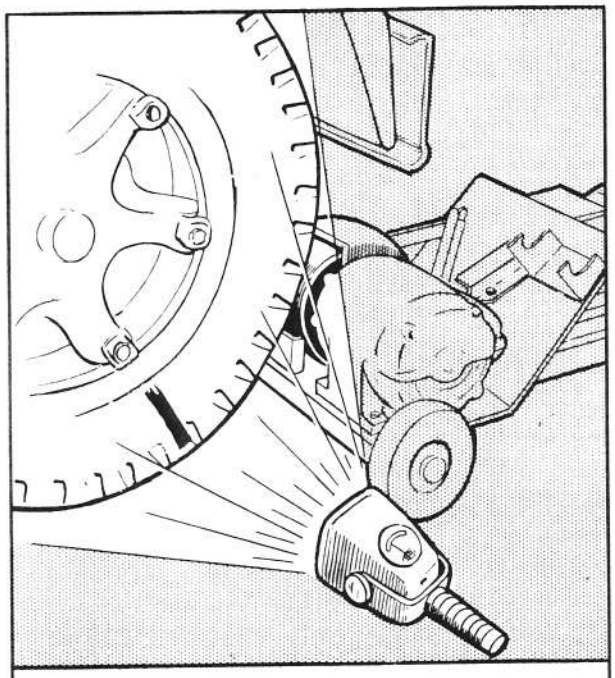

FIG. 5 COMPARE TO CLOCK

(Position of reference mark can be remembered by comparing position to the hour hand of a clock.
For example, if the mark appears at the top, it would be "12 o'clock" -- at the bottom "6 o'clock", etc. Figure 6)

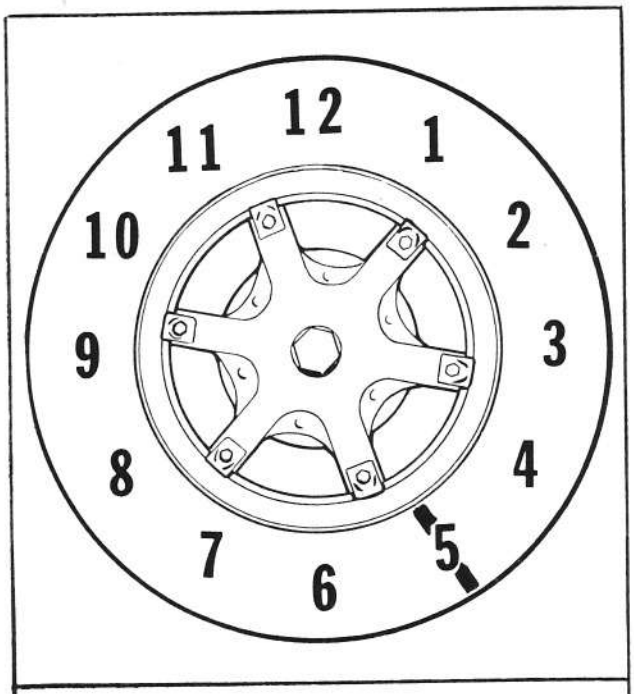


FIG. 6 COMPARE TO CLOCK

11. Depress brake lever to lower brake shroud. Push balancer toward wheel so that brake shroud contacts spinning wheel squarely. Apply just enough pressure to stop spinning wheel. AVOID ABRUPT STOPS.

12. Rotate wheel by hand until reference mark is at same position noted while wheel was coasting at balancing speed.

13. Apply weight at top of wheel (12 o'clock). If needle rose beyond mid-scale of meter, apply a 10 ounce trial weight. If needle did not rise beyond mid-scale of meter, apply a lighter trial weight. See Figure 7.

14. Check balance of wheel: Spin wheel somewhat above balancing speed. Permit wheel to coast and watch meter.

    If needle remains in green section, wheel is balanced kinetically.

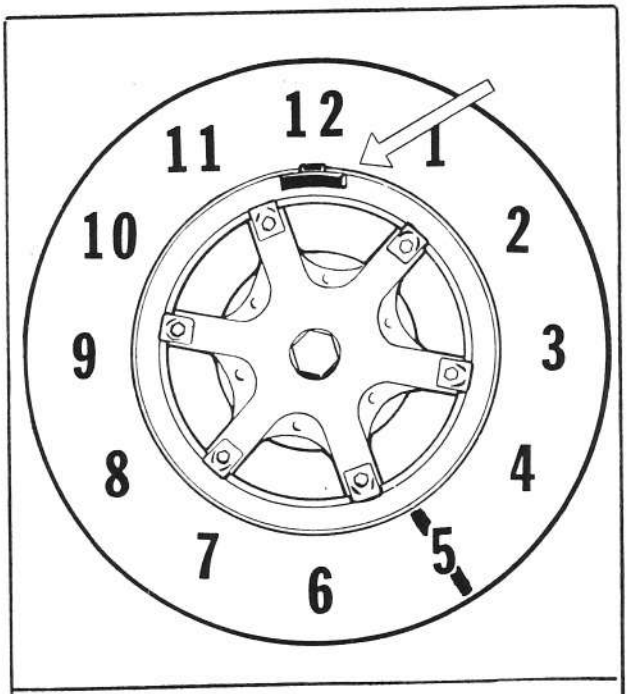


FIG. 7 APPLYING WEIGHT

If needle moves out of green section, use strobe light and note position of reference mark at highest meter reading.

Brake wheel. Rotate wheel by hand until reference mark is at same position noted at highest meter reading.

Check position of weight with diagram in figure 8. Reposition or change amount of weight as indicated in figure 8. Repeat step 14 until needle remains in green section.

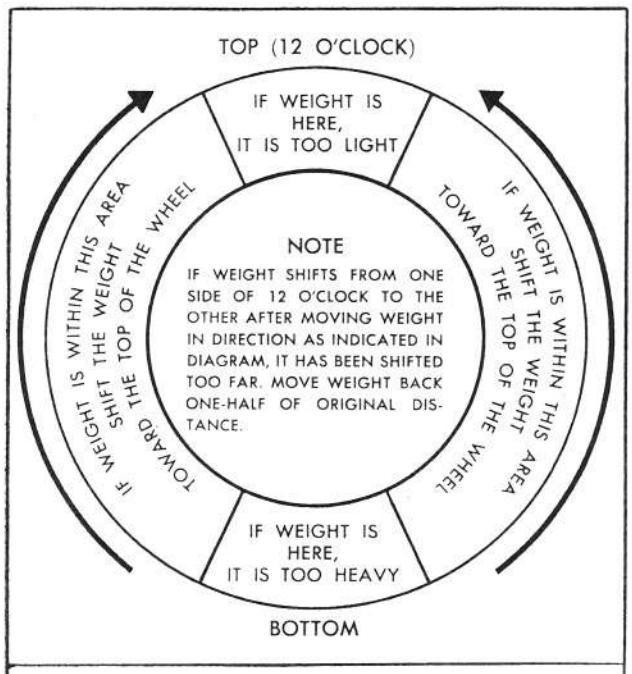


FIG. 8 REPOSITION WEIGHT

If after repeated attempts, needle still does not remain in green section, proceed to dynamic balancing. (Dynamic unbalance is preventing wheel from being balanced kinetically. See Section entitled "Correcting Lateral Runout.")

NOTE: If final amount of weight needed to balance wheel kinetically exceeds 16 ounces, divide weight in half. Apply 1/2 of total weight to inside of rim and other 1/2 of total weight to outside of rim.

14A. In some cases after wheel has been balanced kinetically, and the wheel is spun at very high speed, the needle will rise out of green section. This occurs because the original heavy spot is located in tire and at high speeds the tire expands, causing the heavy spot to exert more unbalance force.

## DYNAMIC BALANCING (SIDE TO SIDE VIBRATIONS) OF FRONT WHEELS ON TRUCKS

15. If erratic meter readings or unsatisfactory balance are encountered, refer to Chart on page 11.

DYNAMIC BALANCING (SIDE TO SIDE VIBRATIONS) OF FRONT WHEELS ON TRUCKS.

1. Turn wheel out approximately one half of its turning radius and leave in this position throughout dynamic balancing procedures.

2. Position balancer so that spinner will contact tire tread squarely when balancer is rolled forward.

3. Position pick-up magnet on clean surface of brake backing plate near front edge as shown in Figure 9.

   The standing height of the pick-up can be adjusted to allow the pick-up magnet to be positioned over or under the steering linkage.

   If there is no backing plate (or if backing plate cannot be reached), position pick-up so that magnet contacts steering arm as shown in Figure 10.

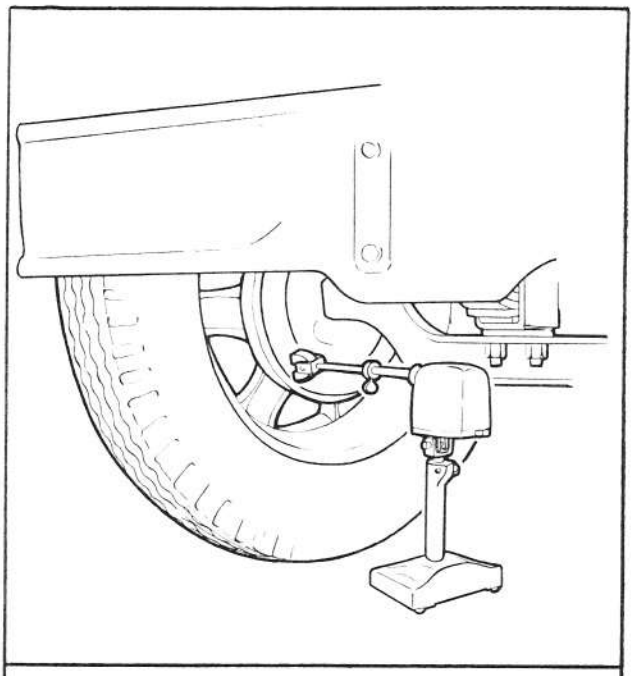

FIG. 9 ON BACKING PLATE

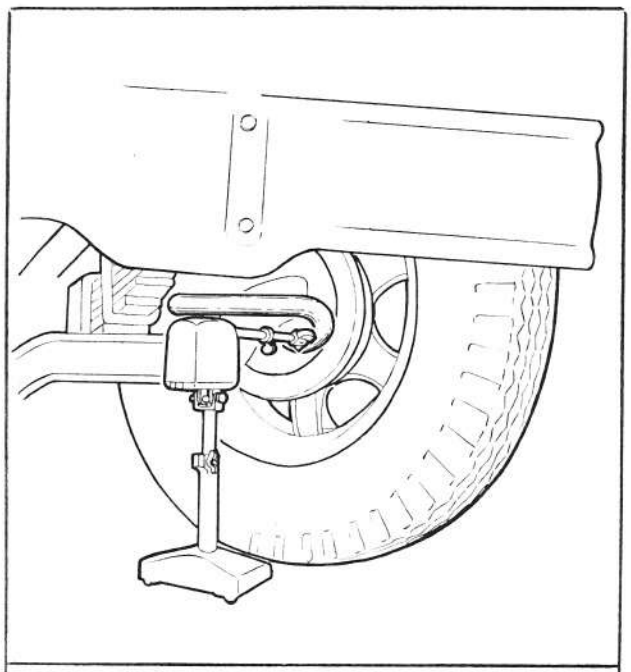

FIG. 10 ON STEERING ARM

4. Push balancer toward wheel so spinner contacts tire tread squarely. Push balancer with enough pressure to spin wheel.

   Point strobe light at wheel and watch meter while wheel is picking up speed.

   WHEN NEEDLE HESITATES OR DROPS BACK FOR A MOMENT AND THEN CONTINUES TO CLIMB UP SCALE, PULL BALANCER AWAY FROM WHEEL AND ALLOW WHEEL TO COAST.

   While wheel is COASTING, loosen and retighten thumb screw on pick-up arm to re-set pick-up.

   Point strobe light at COASTING wheel and watch meter. The needle will rise again. When needle rises to its maximum reading, balancing speed has been reached.

   When balancing speed has been reached, glance at coasting wheel and note position of reference mark. (To remember position of reference mark, compare position to hour hand of a clock.)

5. Depress brake lever to lower the brake shroud. Push balancer toward wheel so that brake shroud contacts spinning wheel squarely. Apply just enough pressure to stop spinning wheel. AVOID ABRUPT STOPS.

6. Rotate wheel by hand until reference mark is at same position noted while wheel was coasting at balancing speed.

7. Apply two trial weights of equal amount. (If needle rose beyond mid-scale of meter, use two 10 ounce weights. If needle did not rise beyond mid-scale of meter, use lighter trial weights.)

   PLACE FIRST WEIGHT ON INSIDE OF WHEEL in line with pick-up magnet. PLACE SECOND WEIGHT ON OUTSIDE OF WHEEL 180 DEGREES FROM FIRST WEIGHT. See Figure 11.

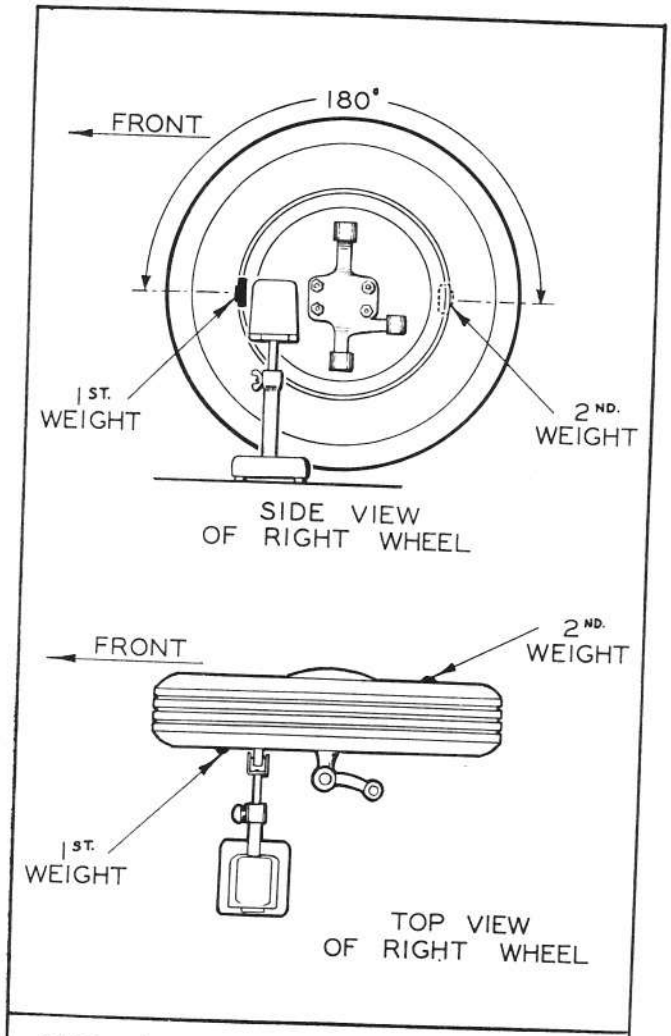


FIG. 11 APPLYING WEIGHTS

8. Check balance of wheel by spinning wheel somewhat above balancing speed. Permit wheel to coast. While wheel is COASTING, loosen and retighten thumb screw on pick-up arm to re-set pick-up.

   Point strobe light at coasting wheel and watch meter. If needle remains in green section, the wheel is balanced.

9. If needle moves out of green section, note position of reference mark at highest meter reading at balancing speed.

   Brake wheel. Rotate wheel so reference mark is at same position noted at highest meter reading.

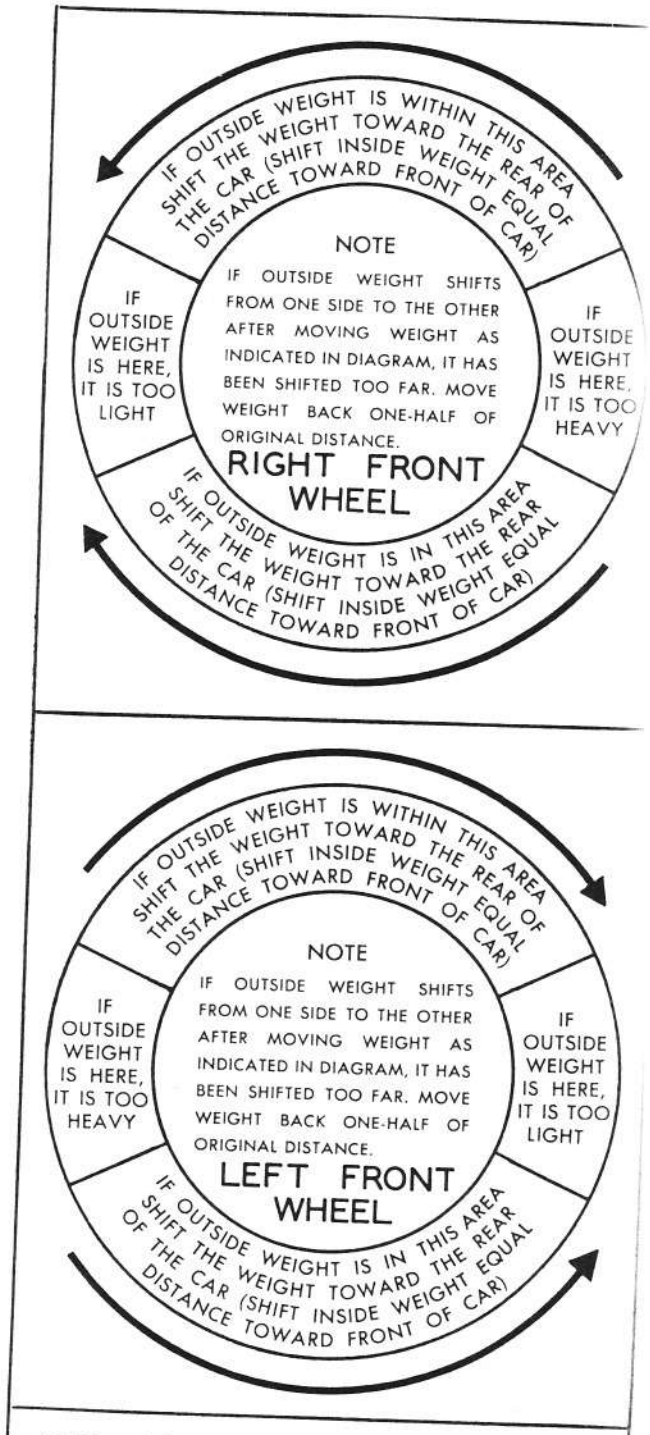


FIG. 12 REPOSITION WEIGHT

Check position of weight with diagram in Fig. 12. Reposition weight or change amount of weight as instructed in figure 12.

Repeat procedure until needle remains in green section.

10. Recheck work.

## KINETIC BALANCING (UP & DOWN VIBRATIONS) OF REAR WHEELS ON TRUCKS

Rear wheels are balanced kinetically only.

SINGLE AXLE:

1. Raise rear wheels in following manner.

   Single axle equipped with single or dual rear wheels -- Place jack under center of rear axle and raise both rear wheels approximately 3 inches off of ground.

   Heavy single axle vehicles equipped with dual rear wheels -- Place jack under frame and raise frame until rear wheels clear floor. Block up frame with horses and remove jack. Place jack under center of rear wheels through approximately 1/2 of the spring travel.

   Tandem axle trucks -- See section entitled "Tandem (Two) Rear Axles" on this page.

2. Lock wheels which are not being balanced by tightening up thoroughly on the brake adjustment. The wheels must be securely locked.

3. Block front wheels.

4. Remove all wheel weights. Remove all stones from tire tread.

5. Wheels should revolve freely. Tap brake backing plate with weight pliers to free wheel if necessary.

6. Position pick-up under axle and raise magnet until it contacts axle close to wheel. The flat plate under the spring is a good location.

7. Balance rear wheels (kinetically) in the same manner as outlined for front wheels in paragraphs 7 to 14 on pages 4, 5, and 6.

NOTE:

The balancing procedure will require an assistant in the cab to operate the engine in order to spin the rear wheels. The instructions for the assistant are as follows:

Instructions to Assistant

Start engine and put truck into high gear. Release the clutch pedal slowly to prevent lurching. Rev up the wheels slowly.

Watch speedometer. Do not run the vehicle over one-half of the top road speed of the truck. (Since one wheel is locked, the free wheel will run at twice the speed indicated on the speedometer.)

At the signal from the man doing the balancing, apply the brakes slowly and put the truck into neutral.

Remain in cab during balancing so as not to affect the adjustment of pick-up.

NOTE: Do not apply weights between the two wheels of a dual set. Do not dismount duals. Balance as a running set.

TANDEM (TWO) REAR AXLES

1. Raise rear wheels in following manner: Place jack under frame and raise frame until rear wheels clear floor. Block up frame with horses and remove jack.

2. Jack up one of the axles so that the two sets of wheels are raised through approximately one-half of spring travel.

3. Disengage the axle of the wheel to be balanced by removing the 6 axle flange stud nuts at the outside of the wheel hub. Pull the axle out about 12 inches. Since these axles are almost without exception, the "Full Floating" type, the axle will be disengaged to permit the wheel to turn freely.

4. Balance the rear wheels in the same manner outlined in paragraphs 7 to 14 on pages 4, 5, and 6.

5. Repeat steps 2, 3, and 4 above for second axle.

NOTE: Do not put weights between the two wheels of a dual set. Do not dismount duals. Balance as a running set.

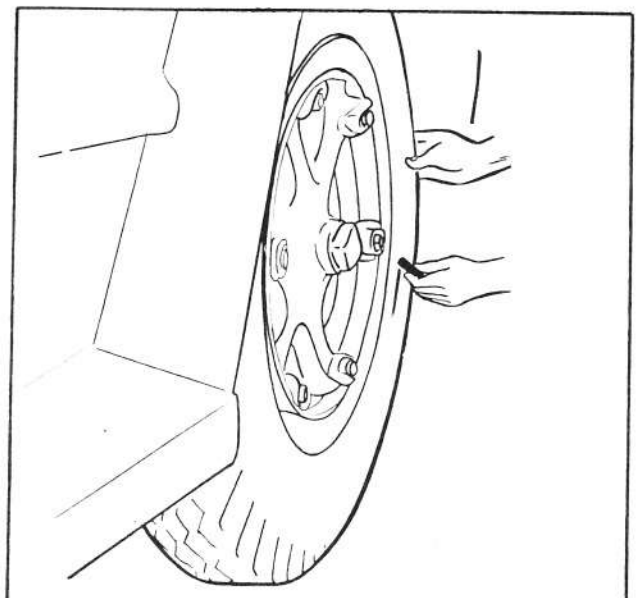

FIG. 13 MARK RUNOUT

## CORRECTING LATERAL RUNOUT

Dynamic unbalance caused by lateral runout can be corrected in some cases by adding weights as illustrated in Figure 13.

Check lateral runout in tire by turning wheel with one hand and slowly move chalk into side wall of tire until chalk makes contact and marks tire at high point.

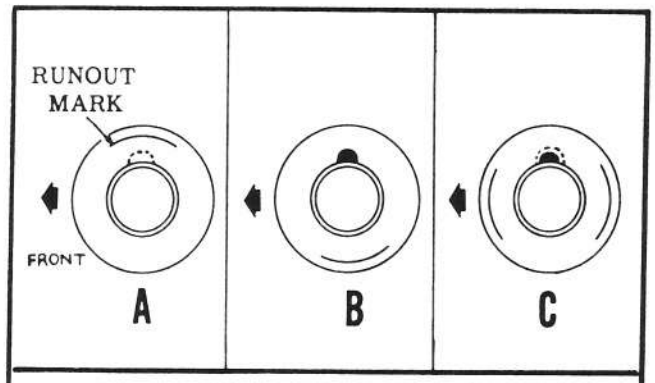


FIG. 14 CORRECTING LATERAL RUNOUT

a. If mark and weight are together, move static weight to inside rim flange.

b. If mark is at opposite weight, move static weight to outside rim flange.

c. If mark is on either side of weight, split weight required and attach 1/2 to inside rim flange and other 1/2 to outside rim flange.

Check for bent rim or improperly mounted tire. Must be corrected or proper balance cannot be obtained.

| UNUSUAL METER READINGS OCCURING DURING KINETIC BALANCING OF FRONT WHEELS | | |
|---|---|---|
| CONDITION | CAUSE | REMEDY |
| Meter needle vibrates | Improper contact of pick-up magnet at "A" frame or axle. | Reposition magnet. |
| | Excessive kinetic unbalance | Move pick-up approximately 4" closer to center of truck and balance wheel. Then move pick-up back to original location and balance again. |
| | | Allow heavy spot of wheel to settle and apply 24 ounce weight to the top of the wheel (at 12 o'clock) on inside. |
| | Loose wheel bearing | Readjust wheel bearing. |
| Meter needle rises gradually to full range of meter without second rise or fall and then gradually returns to zero with speed of wheel. | Defective wheel bearing or races | Repair or replace defective component. |
| Meter needle does not remain in green section after repeated attempts at balancing kinetically. | Excessive dynamic unbalance. | Balance the wheel dynamically before attempting to balance the wheel kinetically. The kinetic balance weight should be divided equally between the outside and inside of wheel so dynamic balance will not be changed.<br><br>NOTE: When dynamic unbalance is caused by lateral runout, the condition can SOMETIMES be corrected by adding weights as instructed in section entitled "Correcting Lateral Runout" on page 10. |

## KINETIC AND DYNAMIC UNBALANCE

There are three types of unbalance conditions found in car wheels -- static, kinetic, and dynamic.

Kinetic unbalance condition causes up and down vibration. Dynamic unbalance condition causes side to side vibrations. Since kinetic and dynamic unbalance conditions usually occur together, the resultant vibrations are a combination of "up and down" and "side to side" vibrations.

Static: A static unbalance condition exists in a wheel when (a) the wheel has a heavy spot, and (b) the wheel is not rotating.

If a wheel with a static unbalance condition were put on a frictionless axle, the section of the wheel with the heavy spot would roll to the bottom side of the axle and remain there.

Since the wheel is not rotating, the static unbalance condition does not cause vibration.

Kinetic and Dynamic: Kinetic and dynamic unbalance conditions occur in a wheel when (a) static unbalance condition exists in the wheel, and (b) the wheel is rotating.

The relationship between kinetic and dynamic unbalance conditions depends on the location of the heavy spot in the wheel. If the heavy spot is located exactly in the center-line of the wheel (Figure A), only kinetic unbalance condition occurs. If the heavy spot is located toward either side of the center-line of the wheel (Figure B), dynamic unbalance condition occurs in addition to kinetic unbalance condition.

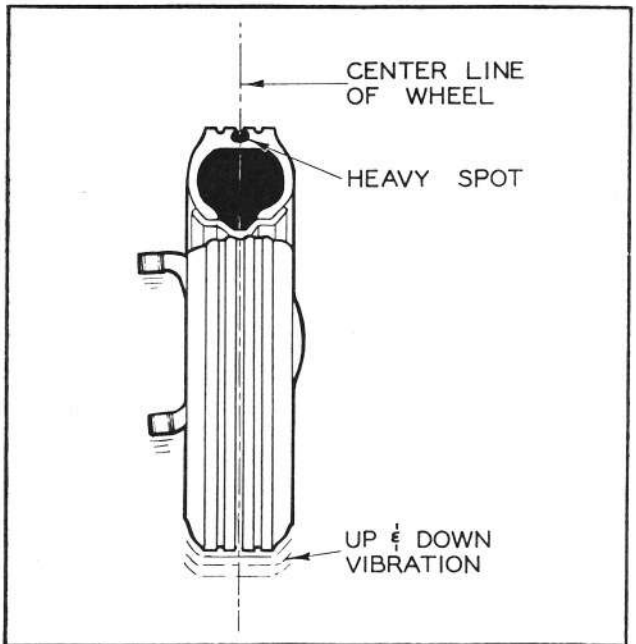


FIGURE A

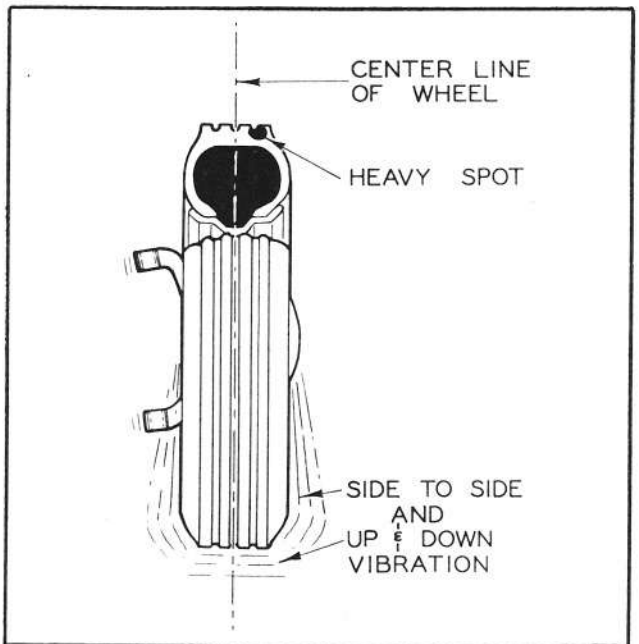


FIGURE B