BRITISH LEYLAND MOTORS INC.

SERVICE DIVISION

DEALER TRAINING

AID # SST 1

SUBJECT: REAR SUSPENSION AND AXLE ASSEMBLY

MODEL: TRIUMPH GT 6+

AUSTIN JAGUAR MG ROVER LAND ROVER TRIUMPH

TRIUMPH GT 6+
REAR SUSPENSION AND AXLE ASSEMBLY

Rear Suspension

A re-designed rear suspension assembly is fitted to the GT 6+. This suspension, shown on Fig. 1 differs from the previous arrangement in the following respects:-

A transverse semi-elliptic leaf spring, centrally mounted on top of the axle centre, is attached to the top of the vertical link assembly to form the upper links of the suspension. A new bottom link ties the lower fulcrum of the vertical link to the chassis.

The vertical link assembly houses the hubs, seals and tapered roller bearings which support the outer drive shaft. Fore and aft location of the suspension is controlled by an adjustable radius arm, flexibly mounted to the body and bottom lower fulcrum bolt.

Spring damping is effected by telescopic direct acting hydraulic dampers.

New Parts and Interchangeability

The assembly is completely new and none of its component parts can be interchanged with those of previous models.

Axle Centre and Final Drive

The axle centre is identical to and interchangeable with those of the earlier models. An arrangement of new components comprising the final drive is shown on Fig. 1. None of these items are interchangeable with drive shafts and hub components of earlier vehicles.

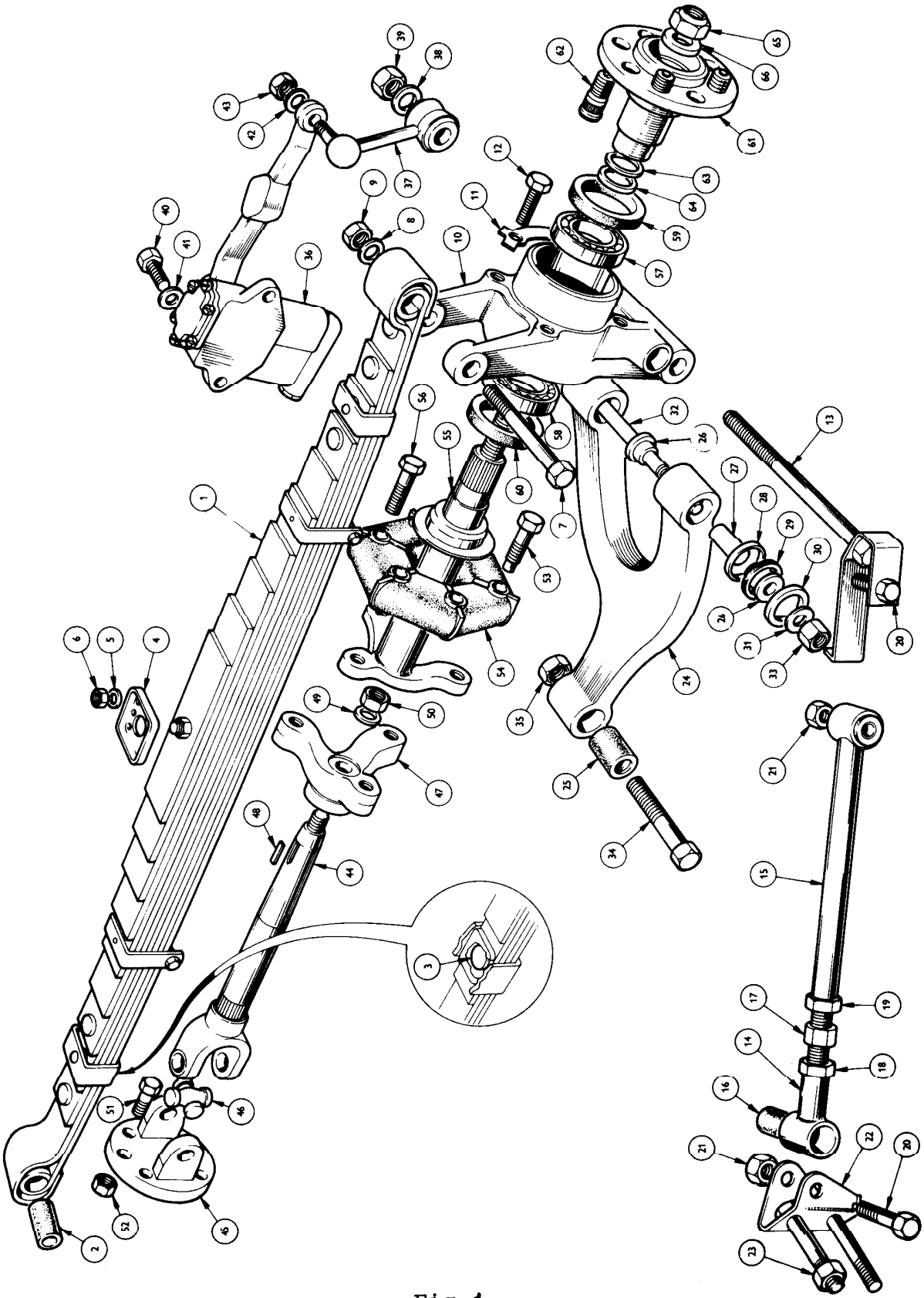

Fig. 1

SERVICING PROCEDURES ARE AS FOLLOWS:-

Hub and Axle Drive Shaft Assembly

Removal

1. Jack up the rear of the vehicle, support it on chassis stands and remove the wheel trim, wheel nuts and road wheel.
2. Remove four bolts (51) to release the intermediate drive shaft (44) from the inner axle shaft.
3. Disconnect the handbrake cable from the handbrake lever.
4. Disconnect the brake pipe, and flexible brake hose from the vertical link.
5. Place a bar made to the dimensions given on Fig. 2 and lift the spring to release the damper of load as shown on Fig. 3. Maintain the spring in this position by placing an axle stand under outer extremity of the bar.
6. Referring to Fig. 1, remove the bolt (20) and swing the radius arm (15) clear.
7. Slacken upper attachment nuts, remove lower attachment nuts and lower end of damper clear.
8. Remove the bolt (34) securing the lower wishbone to the chassis and take out the bolt (7) to release the rear road spring eye.
9. Withdraw the hub, vertical link and drive shaft assembly from the vehicle.
10. Fit the compression clamp (tool S328) to the rotoflex rubber coupling (54) and detach the coupling from both drive shafts by removing six bolts (56) (53).
11. Remove brake drum, hub nut (65) and washer (66). Using hub removal tool S109B with thread protector S109C3, push the outer drive shaft from the hub assembly as shown in Fig. 22, taking care not to lose the shims (64), and space collar (63) fitted to the neck of the outer drive shaft.
12. Using press tool S4221 and adaptors S4221A-17, remove the stoneguard and spacer from the outer shaft. Fig. 4. Withdraw rotoflex coupling (54) from drive shaft (55).

To Dismantle Hub and Shaft Assembly:

1. Press out shaft as shown in figure 22 and referred to in No. 11 above.
2. Place thrust button (supplied with S.326) in the inner hub flange and using tool S.342 as shown in figure 5 remove vertical link assembly, this leaves behind the outer oil seal and bearing.
3. To remove hub outer bearing and seal use adaptor S.4221A-16 (as used on TR4A and TR250 half shaft hub bearings) with handpress S.4221A.

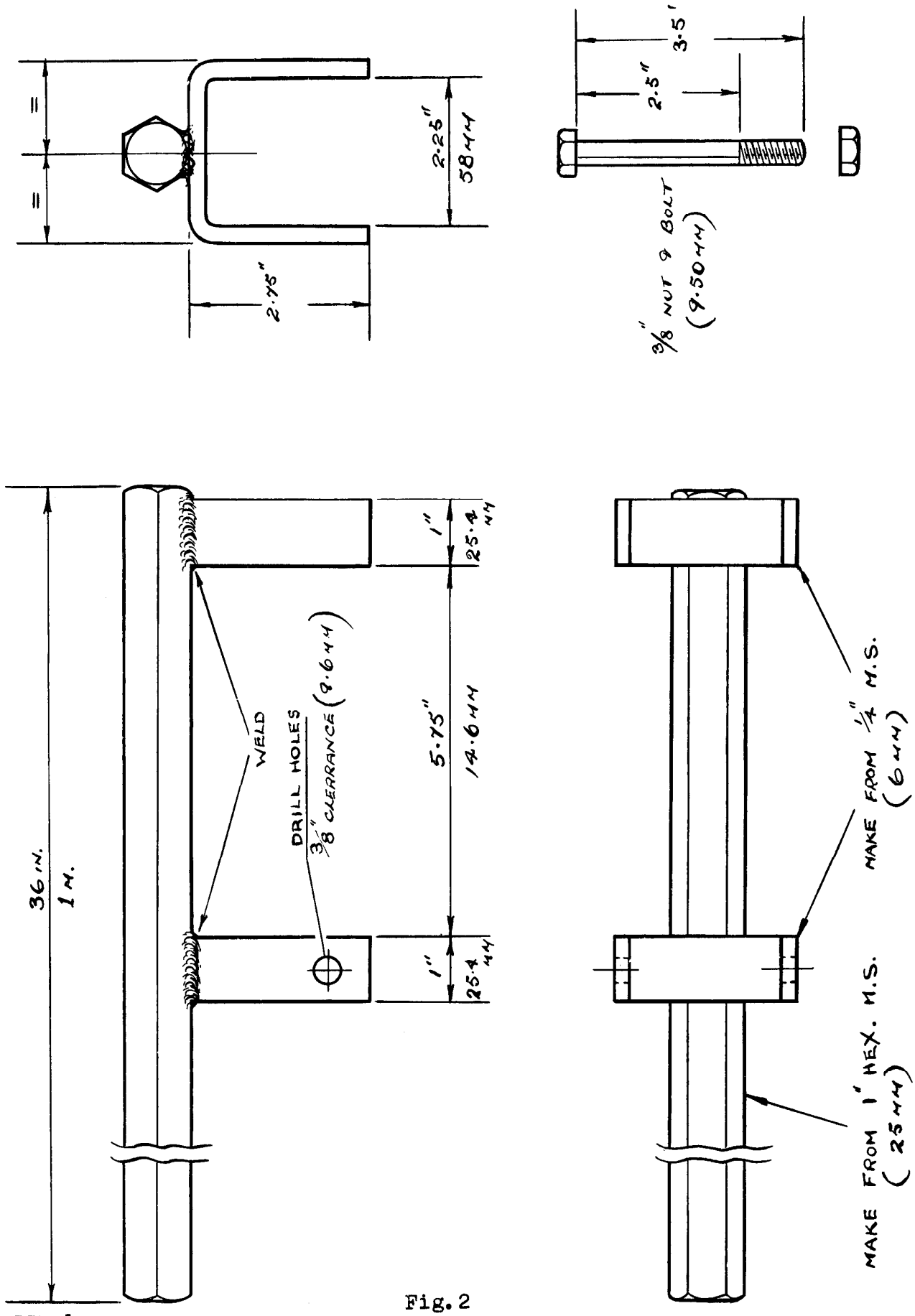
=
=
2.25"
58MM
2.75"
3.5"
2.5"
3/8" NUT & BOLT
(9.50MM)
36 IN.
1M.
WELD
DRILL HOLES
3/8" CLEARANCE (9.6MM)
1"
25.4 MM
5.75"
146MM
1"
25.4 MM
MAKE FROM 1/4" M.S.
(6MM)
MAKE FROM 1" HEX. M.S.
(25MM)

Fig. 2

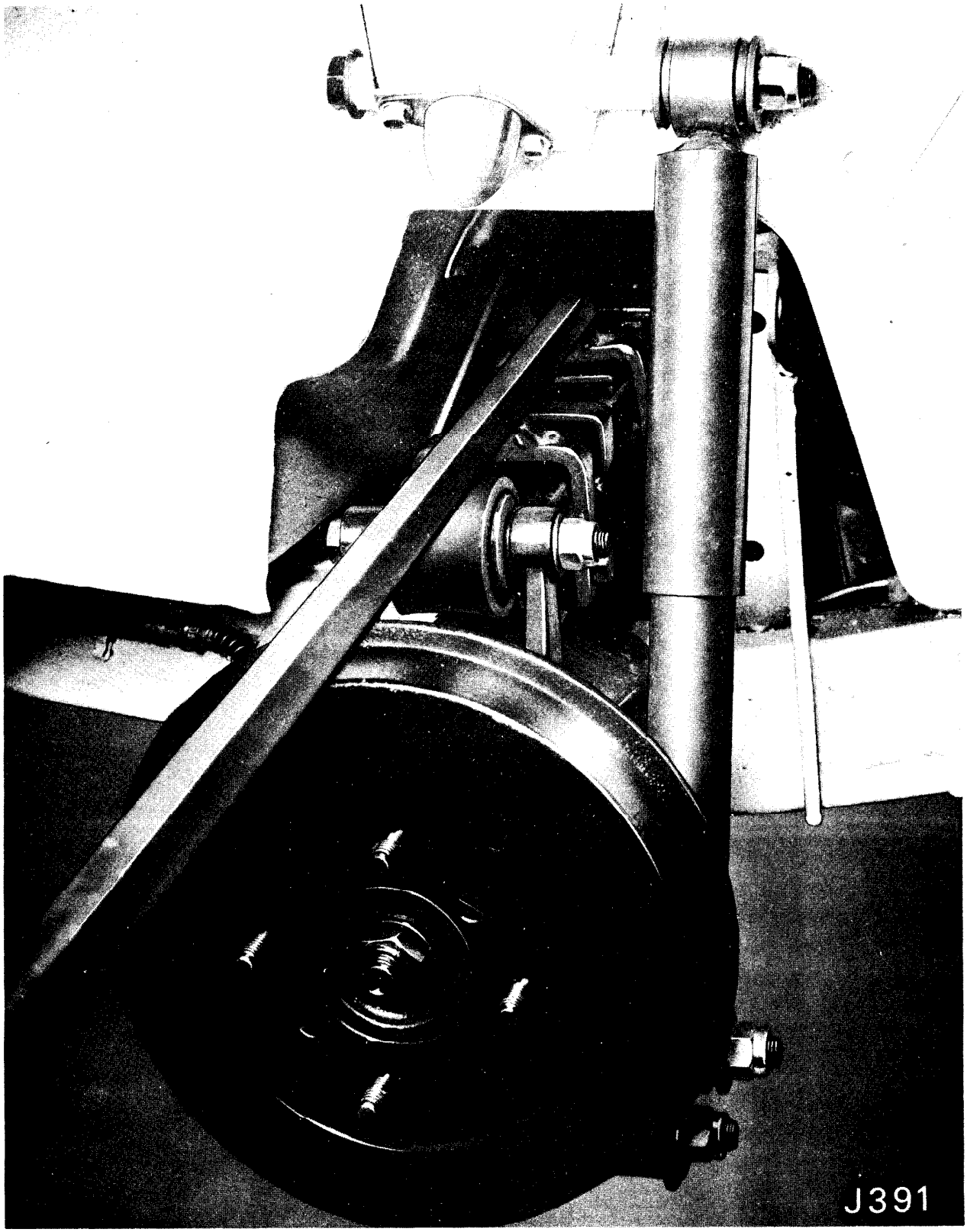

Fig. 3

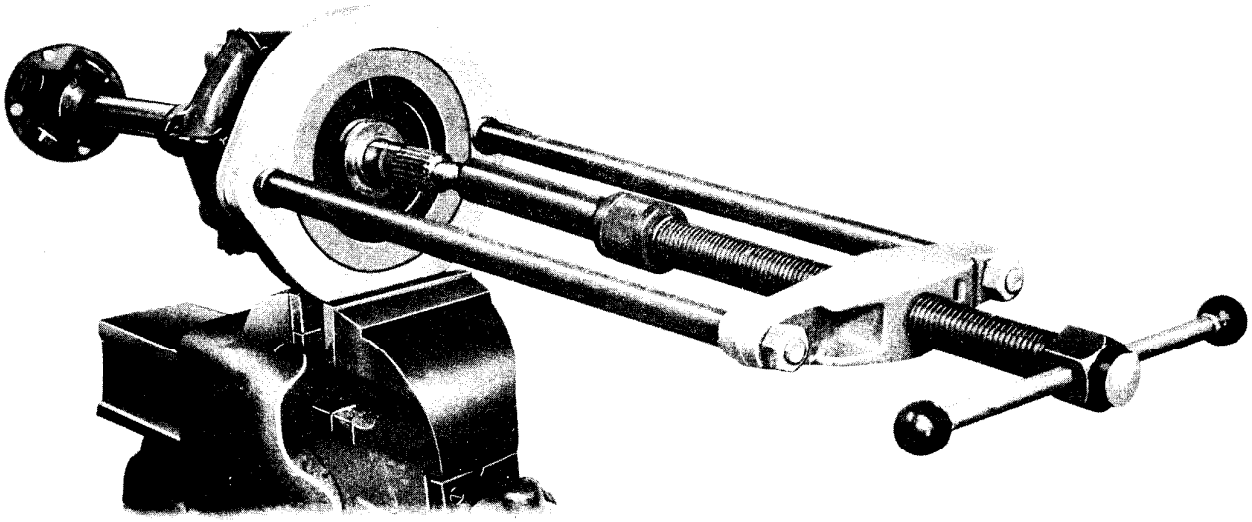

Fig. 4

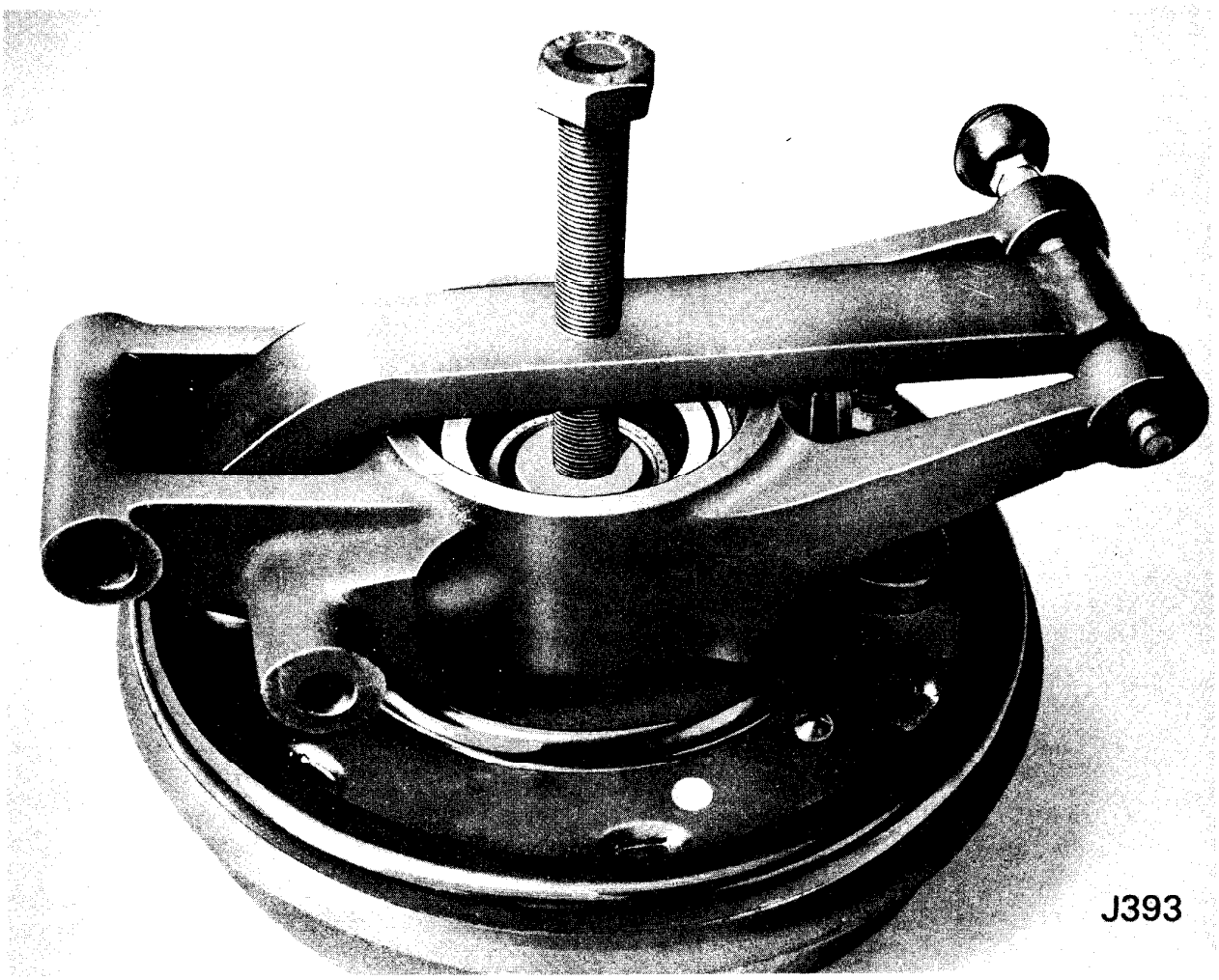

Fig. 5

4. Remove inner bearing from vertical link by turning through 90° and pulling through the leather seal. Drift out seal and bearing cups.
5. Hub adjustment and assembly:
   Take the measurement mentioned as shown in figure 25 (use flat plate from S.325). This records the difference between wheel flange and tool by the use of a feeler gauge which will be kept and used later in assembly.
6. Fit dry bearings to the vertical link and assemble with the end float gauge S.325 as shown in Figure 27. Tightening and rotating the finger screw to track the bearings. Insert the feeler gauge determined in figure 25 and select spacer and shims which fit tightly (see figure 26). This thickness of spacer and shim will give .002"-.005" dry bearing end float.
7. Dismantle gauge and liberally grease and refit the outer bearing, fit the outer seal as shown in figure 28 and wipe off surplus grease. Use the vertical outer oil seal replacer S.322.
   Fit this assembly to the wheel flange using drift S.324 as shown in figure 28.
   Liberally grease and start the inner bearing race squarely onto the wheel flange tapping very gently with a soft hammer.
   Fit inner oil seal, fit spacer and shims and reassemble vertical link and shaft assembly.

To Refit Rotoflex Coupling

1. Feed the outer drive shaft through the new coupling and secure the coupling to the spider with three new bolts (53).
2. Using a suitable drift, replace stoneguard and spacer.
3. Replace collar and shim to the outer drive shaft and insert the splined end of the shaft into the hub assembly using a drift tool to gain sufficient threads for the new nyloc hub nut. Replace the hub washer and nut; tighten the nut to 110 - 115 lbs. ft.
4. Secure the intermediate drive shaft to the outer shaft with three new bolts (56). Remove the mild steel band from the new rotoflex rubber coupling.

To Refit Hub and Axle Drive Shaft Assembly

Reverse the removal instructions and bleed the brake system as detailed in the Workshop Manual.

Note: Hub end float .0005" to .0025".

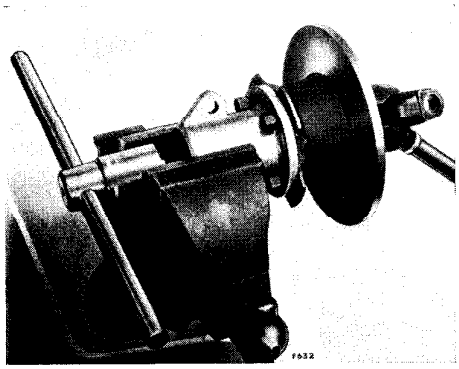

Fig. 22.
Pressing out stub-shaft

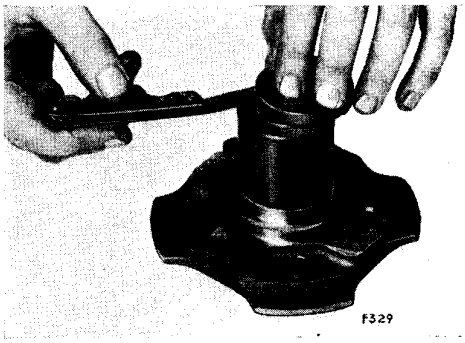

Fig. 25.
Measuring difference between wheel flange and gauge spacer

Fig. 26.
Selecting correct thickness of spacer and shim(s)

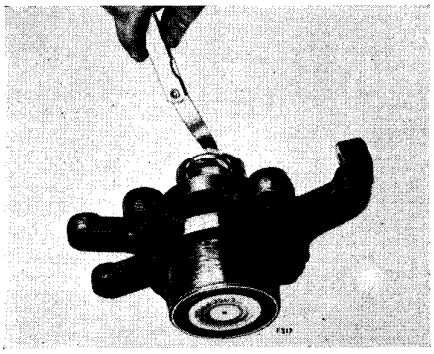

Fig. 27.
Assembled end-float gauge

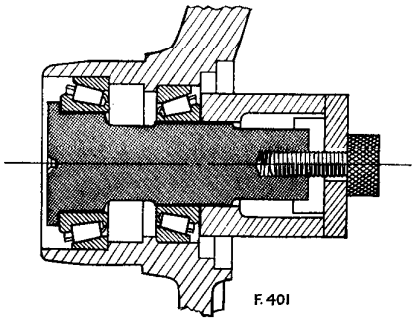

Fig. 28.
Fitting outer oil seal

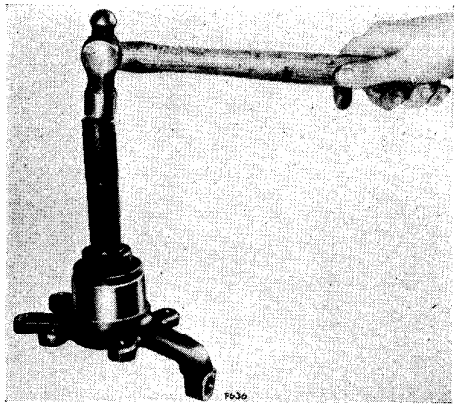

Fig. 29.
Fitting outer bearing and vertical link to the wheel flange